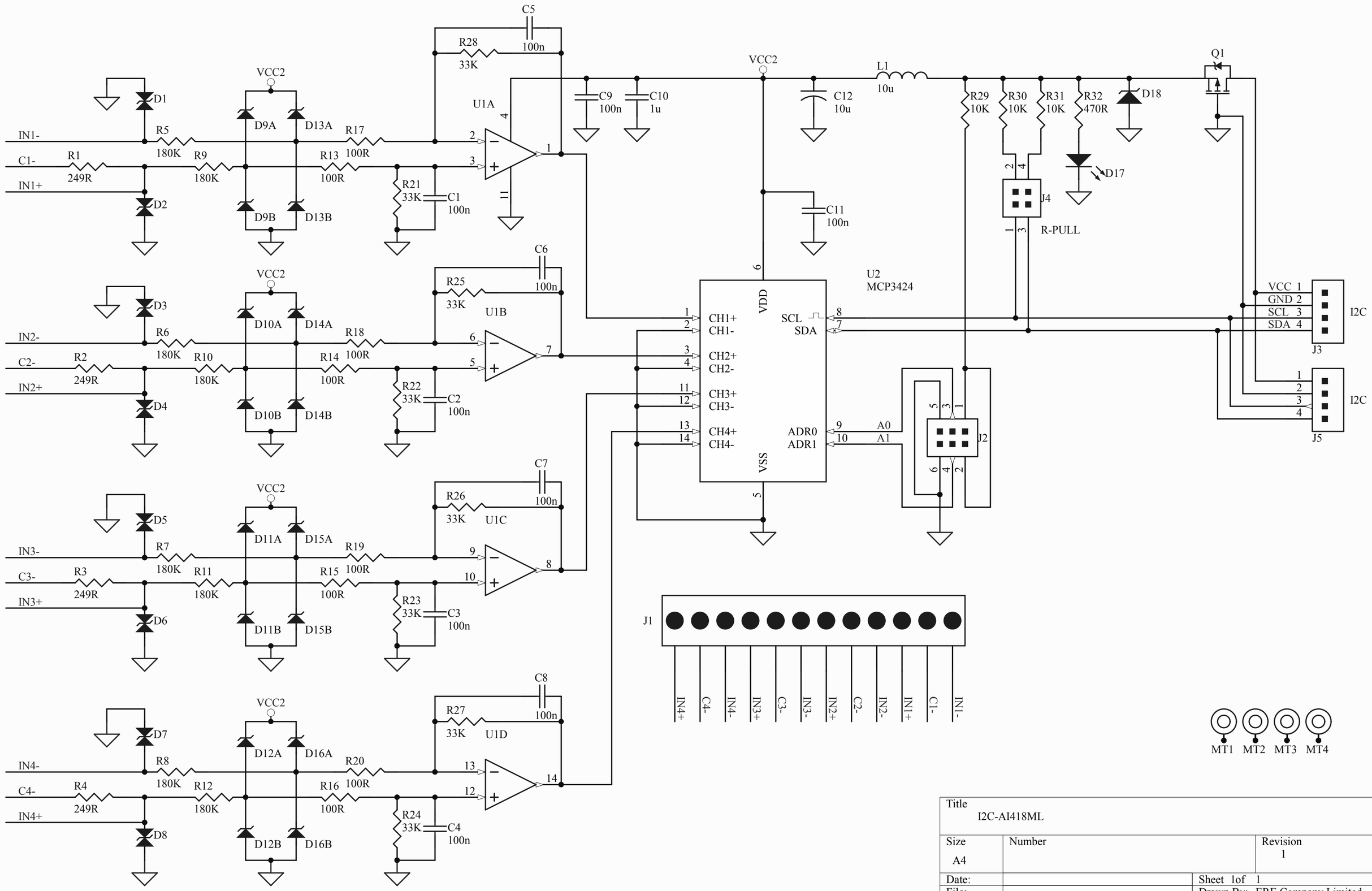


| | | |
|---|---|---|
| Title I2C-AI418ML | | |
| Size A4 | Number | Revision 1 |
| Date: | | Sheet 1of 1 |
| File: | | Drawn By: ERE Company Limited. |