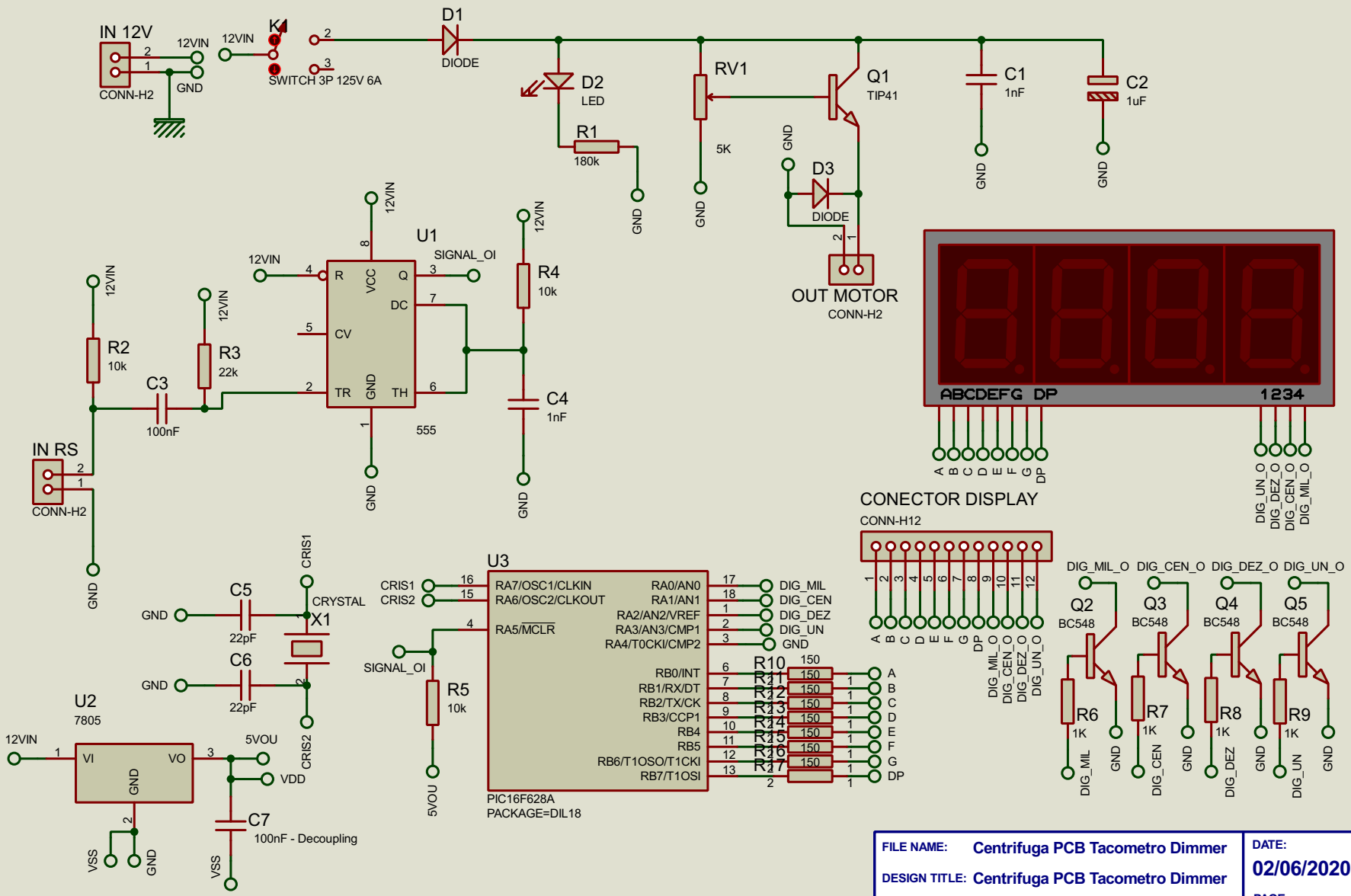

FILE NAME:	Centrifuga PCB Tacometro Dimmer
DESIGN TITLE:	Centrifuga PCB Tacometro Dimmer
PATH:	
BY:	Engº Sergio Caetano
REV:	1/1
DATE:	02/06/2020
PAGE:	1 of 1
TIME:	15:36:52