2 Phase Hybrid Stepper Motor
17HS series-Size 42mm(1.8 degree)

Wiring Diagram:

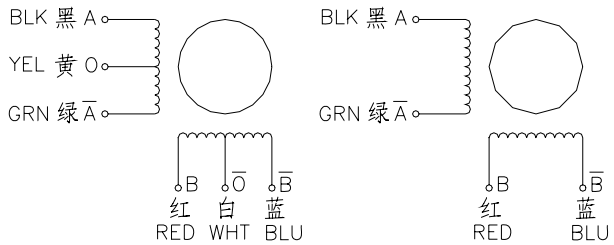

UNI-POLAR(6 LEADS) BI-POLAR(4LEADS)

Electrical Specifications:

Series Model	Step Angle (deg)	Motor Length (mm)	Rated Current (A)	Phase Resistance (ohm)	Phase Inductance (mH)	Holding Torque (N.cm Min)	Detent Torque (N.cm Max)	Rotor Inertia (g.cm²)	Lead Wire (No.)	Motor Weight (g)
17HS2408	1.8	28	0.6	8	10	12	1.6	34	4	150
17HS3401	1.8	34	1.3	2.4	2.8	28	1.6	34	4	220
17HS3410	1.8	34	1.7	1.2	1.8	28	1.6	34	4	220
17HS3430	1.8	34	0.4	30	35	28	1.6	34	4	220
17HS3630	1.8	34	0.4	30	18	21	1.6	34	6	220
17HS3616	1.8	34	0.16	75	40	14	1.6	34	6	220
17HS4401	1.8	40	1.7	1.5	2.8	40	2.2	54	4	280
17HS4402	1.8	40	1.3	2.5	5.0	40	2.2	54	4	280
17HS4602	1.8	40	1.2	3.2	2.8	28	2.2	54	6	280
17HS4630	1.8	40	0.4	30	28	28	2.2	54	6	280
17HS8401	1.8	48	1.7	1.8	3.2	52	2.6	68	4	350
17HS8402	1.8	48	1.3	3.2	5.5	52	2.6	68	4	350
17HS8403	1.8	48	2.3	1.2	1.6	46	2.6	68	4	350
17HS8630	1.8	48	0.4	30	38	34	2.6	68	6	350

***Note:** We can manufacture products according to customer's requirements**.**

Dimensions: unit=mm

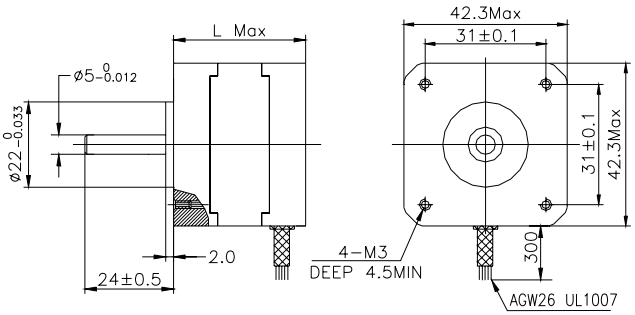

Motor Length:

Model	Length
17HS2XXX	28 mm
17HS3XXX	34 mm
16HS4XXX	40 mm
16HS8XXX	48 mm