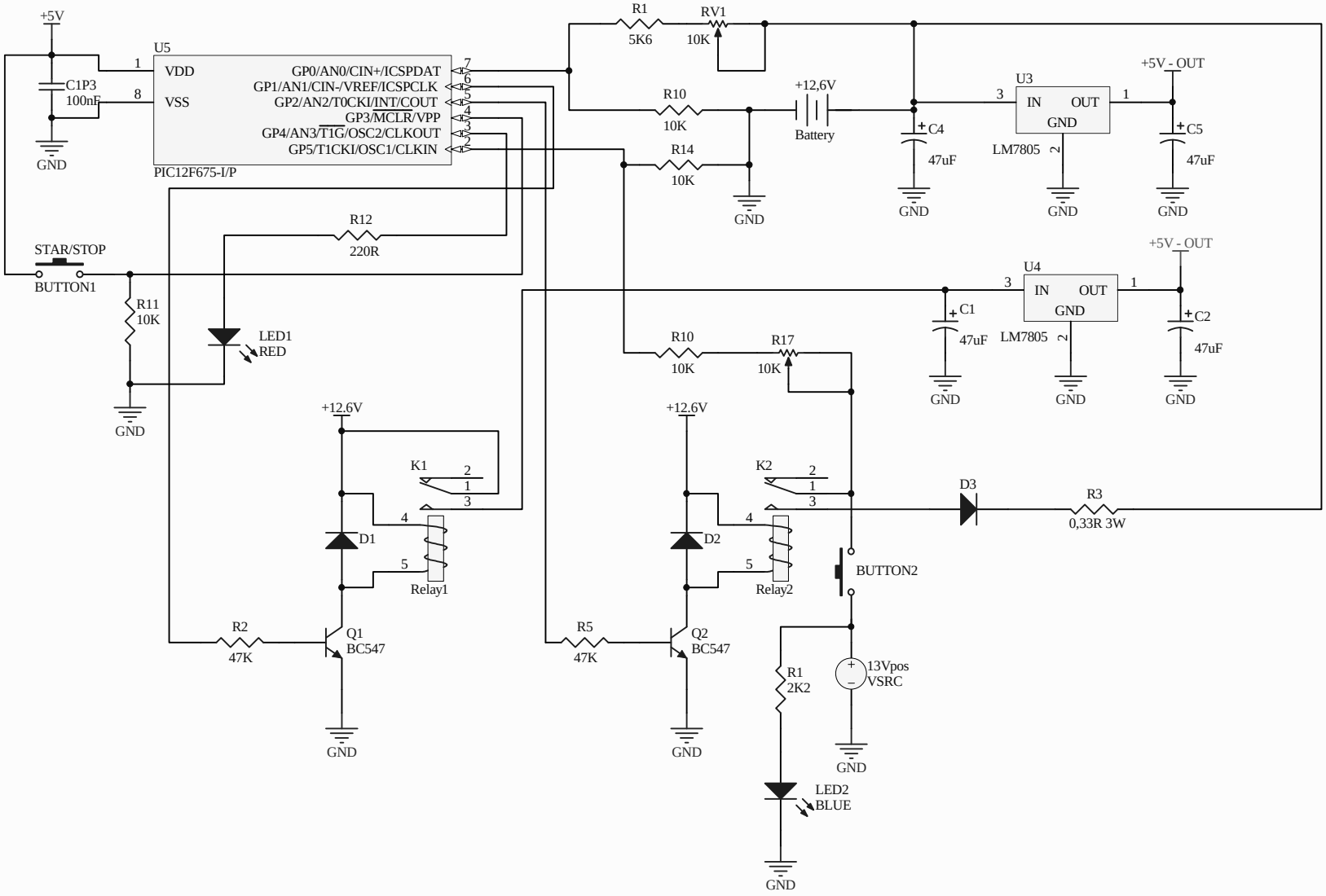


| Title | | |
|---|---|---|
| Size A4 | Number | Revision |
| Date: 08/12/2015 | Sheet of | |
| File: C:\Users\..\Sheet2.SchDoc | Drawn By: | |